SUPPLYING DEMAND®

SDW11572053
DRAIN HOSE INSTALLATION

IMPORTANT: UNPLUG YOUR APPLIANCE AND TURN OFF POWER AT THE BREAKER BEFORE SERVICING. IF YOU HAVE DOUBTS OR ARE UNFAMILIAR WITH THIS TYPE OF INSTALLATION WORK, SEEK THE SERVICES OF A QUALIFIED SERVICE TECHNICIAN. SUPPLYING DEMAND ASSUMES NO RESPONSIBILITY FOR THE IMPROPER INSTALLATION OF THIS PRODUCT.

1. Remove the rear panel. See Fig. 1 for illustration of the five screw locations.
2. Insert the molded connection end of the drain hose through the hose clamp and over the discharge port on the drain pump as shown.
3. Locate the clamp.
4. To keep the drain hose from kinking, coil excess drain hose and secure it with the cable tie.
5. Reinstall the rear panel.

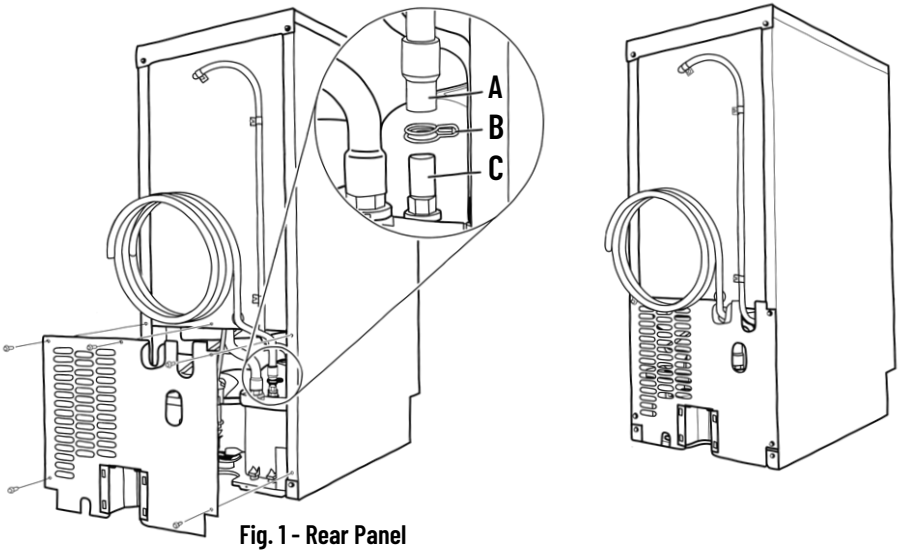

Fig. 1 - Rear Panel